BUCK CONVERTOR

1 Introduction

In many industrial and embedded systems, a stable DC voltage is required for proper operation of electronic devices. However, available power sources often provide higher DC voltage than required by the load. Therefore, a DC-DC step-down converter is used to reduce voltage efficiently.

This project presents the design and implementation of a **24V to 12V DC Buck Converter** using the XL4016E1 switching regulator IC.

A buck converter is a high-efficiency switching power supply that steps down input voltage while maintaining high current capability. Unlike linear regulators, which dissipate excess voltage as heat, a buck converter uses high-frequency switching, an inductor, and energy storage components to achieve efficient voltage conversion.

The designed circuit converts:

- **Input Voltage:** 24V DC
- **Output Voltage:** 12V DC
- **Switching Frequency:** Approximately 180 kHz
- **Topology:** Non-isolated step-down converter

This design includes proper input filtering, output smoothing, feedback regulation, and protection components to ensure stable and reliable performance.

---

2 Circuit Overview

The circuit consists of the following main sections:

1. Input Protection and Filtering Section
2. Switching Control Section (XL4016 IC)
3. Energy Storage and Transfer Section
4. Output Filtering Section
5. Feedback and Voltage Regulation Section

Each section plays an important role in maintaining efficiency and voltage stability.

3 Detailed Working Explanation

◆ 3.1 Input Protection and Filtering Section

Components Used:

- D1,D2 (10A Diode)
- C1 Inputcapacitor Electrolytic Capacitor(1000uf,25v)
- C2 Output capacitor Electrolytic Capacitor(470uf,50v)
- C1,C2,C3 Ceramic Capacitor(105)
- 24V Input Terminals
- XL4016 IC is the main controller of the buck converter.
- L1 (47µH, 5A Inductor)
- D2 (10A Schottky Diode)
- R1 Resistor(12k)
- R2, R3 Resistor Divider Network(1.5k)

Working:

The 24V DC supply is applied at the input terminal.

- **D1** provides reverse polarity protection. If the input polarity is accidentally reversed, it prevents damage to the circuit.
- **C1 (large electrolytic capacitor)** reduces low-frequency ripple and stabilizes the DC input.
- **C2 (ceramic capacitor)** filters high-frequency noise caused by switching.

This ensures that a clean and stable DC voltage is supplied to the VIN pin of the XL4016 IC.

◆ 3.2 Switching Control Section (XL4016 IC)

The XL4016 IC is the main controller of the buck converter.

Pin Connections in Your Circuit:

- **VIN (Pin 5):** Connected to 24V input
- **OUT (Pin 3):** Connected to inductor L1
- **GND (Pin 1):** Connected to ground
- **FB (Pin 2):** Connected to resistor feedback network

- **VC (Pin 4):** Connected to compensation capacitor C3

Working:

The IC contains an internal high-speed switching transistor. It turns ON and OFF at high frequency (~180 kHz). The duty cycle of this switching determines the output voltage. The feedback pin continuously monitors the output voltage and adjusts the duty cycle automatically to maintain a constant 12V output.

◆ 3.3 Energy Storage and Transfer Section

Components Used:

- L1 (47µH, 5A Inductor)
- D2 (10A Schottky Diode)

Operation:

When the Internal Switch is ON:

- Current flows from VIN → OUT → Inductor L1.
- The inductor stores energy in its magnetic field.
- Diode D2 is reverse biased.

When the Internal Switch is OFF:

- The inductor releases stored energy.
- D2 becomes forward biased.
- Current flows to the output capacitor and load.

This continuous switching process transfers energy efficiently from input to output.

◆ 3.4 Output Filtering Section

Components Used:

- C4 (Ceramic Capacitor)
- C5 (Electrolytic Capacitor)
- 12V Output Terminals

Working:

- C5 smooths low-frequency ripple.
- C4 removes high-frequency switching noise.
- Together they produce stable 12V DC output.
- The output terminals provide regulated 12V supply to the loa

◆ 3.5 Feedback and Voltage Regulation Section

Components Used:

- R1, R2, R3 (Resistor Divider Network)

The feedback pin (FB) senses output voltage through the resistor divider.

The output voltage is determined by:

Vout=1.25×(1+RupperRlower)V_{out} = 1.25 \times \left(1 + \frac{R_{upper}}{R_{lower}}\right)Vout=1.25×(1+RlowerRupper)

Where:

- R_upper = R1 + R2
- R_lower = R3

The resistor values are selected such that the output voltage remains at 12V.

If output voltage increases:
→ Duty cycle decreases.

If output voltage decreases:
→ Duty cycle increases.

This automatic correction ensures stable regulation.

◆ 3.6 Compensation Capacitor (C3)

C3 is connected to the VC pin of the IC.

Purpose:

- Stabilizes control loop
- Prevents oscillations
- Improves transient response
- Enhances system stability

Without proper compensation, the converter may become unstable.

4 Complete Workflow of the Converter

1. 24V DC is applied at the input.
2. D1 protects against reverse polarity.
3. C1 and C2 filter input ripple.
4. XL4016 switches internally at high frequency.
5. L1 stores and releases energy.
6. D2 provides current path during OFF cycle.
7. C4 and C5 smooth the output.
8. Feedback network senses output voltage.
9. IC adjusts duty cycle.
10. Stable 12V DC output is produced.

5 Conclusion

The designed 24V to 12V buck converter using XL4016 successfully steps down DC voltage with high efficiency. The circuit incorporates proper filtering, energy storage, protection, and feedback control to ensure stable and reliable operation.

6 Block Daigram

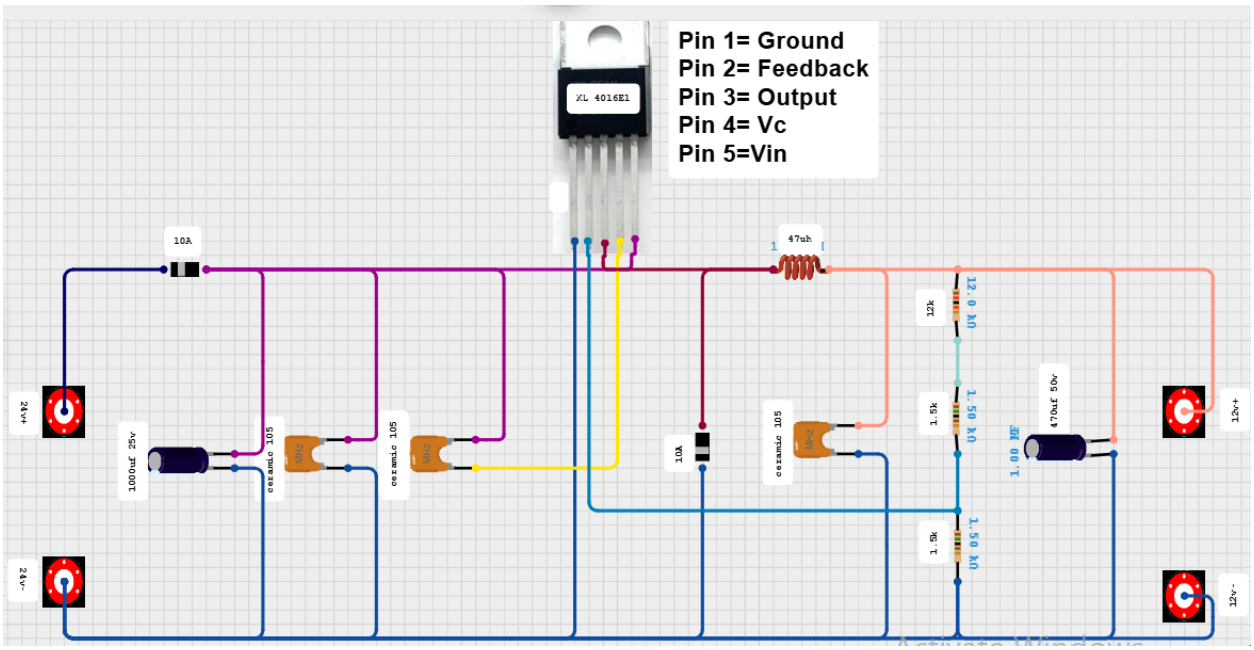
Pin 1= Ground
Pin 2= Feedback
Pin 3= Output
Pin 4= Vc
Pin 5=Vin
XL 4016E1
10A
47uh
12k
12.0 kΩ
1.5k
1.50 kΩ
1.5k
1.50 kΩ
1.00 MΩ
470uf 50v
12v+
12v-
24v+
24v-
1000uf 25v
ceramic 105
ceramic 105
ceramic 105
10A